Service Bulletin

DOWNFLOW CONFIGURATION
DRAIN PAN INSULATION AS AN ALTERNATIVE TO THE DOWNFLOW KIT (DFK)

Bulletin No.: 007
Issue Date: October 21, 2026
Models: All indoor unit (air handler) models

Equipment Needed

Closed-cell foam insulation tape or insulating spray (field supplied)

Tools Required

Screwdriver or nut driver, utility knife

Issue

The installation manual (Downflow/Horizontal Installation, page 11) states that a downflow kit (DFK) is required on all downflow installations to prevent coil pan "sweating." If a DFK is not readily available, insulating the bottom of the drain pan in the field with insulation tape or insulating spray, as described below, is an acceptable alternative.

Procedure

1. Before inverting the air handler, remove the blower access panel and the coil access panel. Remove and retain the seven (7) screws securing the coil access panel and the six (6) screws securing the blower access panel.

   The coil access panel and tubing panel may remain screwed together.

2. Slide the coil assembly out of the cabinet, using the drain pan to pull it.

   Caution: *Do not use the manifolds or flowrator to pull the coil assembly out. Doing so may damage braze joints and cause leaks.*

3. On units with a 21 in. (533.4 mm) wide cabinet, remove and retain the two (2) screws securing the center support, then remove the center support.

4. Remove the side drain pan extension (see Fig. 7).

5. **Insulate the bottom of the drain pan.**
   a. Make sure the outside bottom of the drain pan is clean and dry.
   b. Apply closed-cell foam insulation tape (or insulating spray) to the bottom of the pan around the full perimeter of the coil opening (see photos below).
   c. Butt or overlap seams tightly so no bare pan surface is left exposed.
   d. Keep the drain connections and coil face clear.

6. Using the drain pan to hold the coil assembly, slide the coil back into the cabinet on the downflow brackets (see Fig. 7).
   a. Make sure the coil slides on the rails along the groove on the drain pan side walls. Failure to do so will result in improper condensate drainage.

7. Re-install the center support (if removed) using the two (2) screws removed in step 3.

8. Re-install the access panels removed in step 1 in the downflow configuration (installation manual, Fig. 8).

9. Connect the condensate drain line to the primary drain connection and keep the top drain connection plugged, per the installation manual.

Drain Pan Insulation



Insulation tape being applied to the bottom of the drain pan



Insulation applied around the full perimeter



Coil installed on the downflow brackets

Reference Figures – Installation Manual

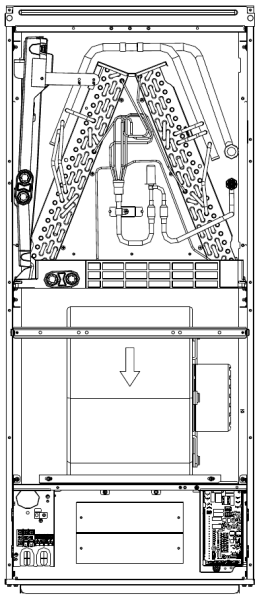

Fig. 3 – Downflow orientation

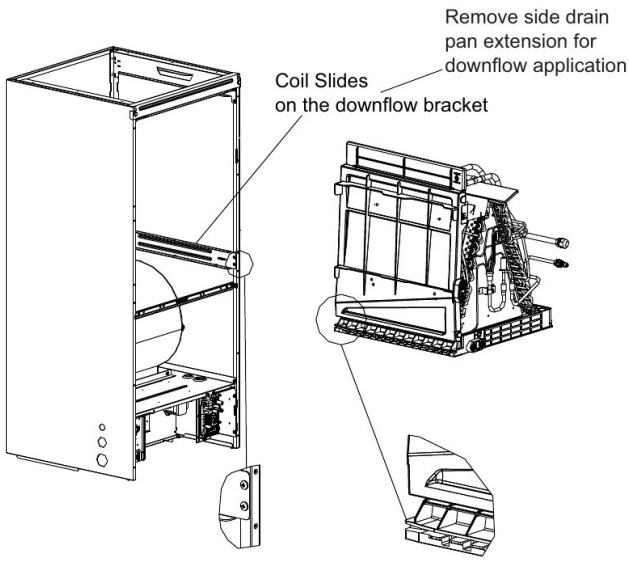

Fig. 7 – Coil installation for downflow

Note

If a DFK is not readily available, the drain pan insulation method in this bulletin is acceptable in place of the downflow kit (DFK) requirement on page 11 of the installation manual. All other downflow installation instructions in the manual still apply.